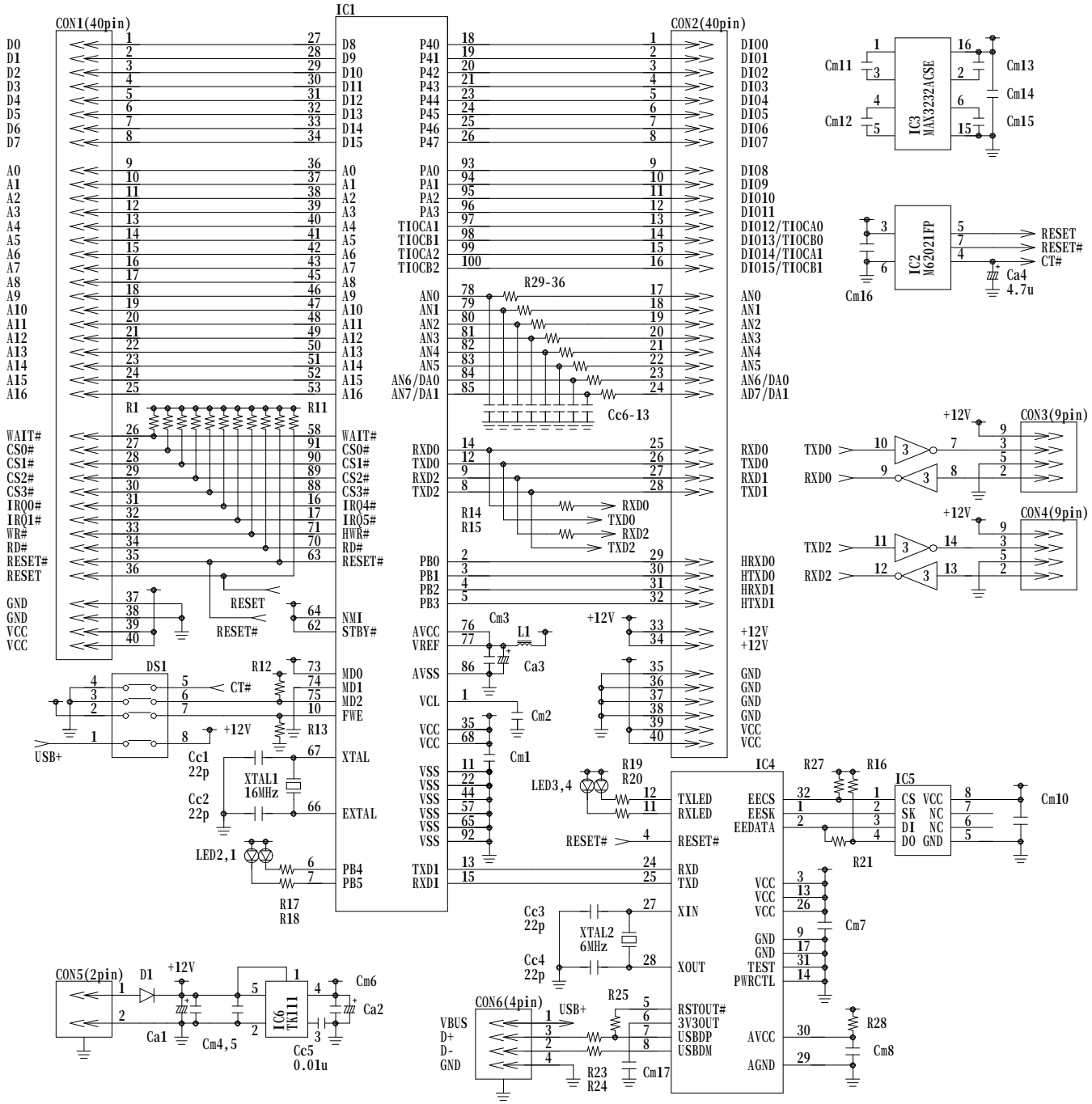

IC1	HITACHI	HD64F3069RF	
IC2	MITSUBISHI	M62021FP	
IC3	MAXIM	MAX3232CSE	
IC4	FTDI	FT8U232BM	
IC5		93C46	DIP8
IC6	TOKO	TK11150CSCL	
LED1,3	STANLAY	PG1112H-TR(R)	2012type
LED2,4	STANLAY	PG1112H-TR(G)	2012type
D1	TOSHIBA	U1GC44	
Cm1-17		0.1u	2012type
Cc1-4		22p	2012type
Cc5		0.01u	2012type
Cc6-13		100p	2012type
Ca1-3	nichicon	UWT1V101MCR1GS	100u 35V
Ca4	nichicon	UWT1E4R7MCR1GB	4.7u 25V
CON1,2		LFCN40N-C1184	
CON3,4	JST	JEY-9P-1A3A	
CON5		DC 5.5-2.1	DCｼﾞｬｯｸ
CON6	OMRON	XM7B-0422	USB(B)
DS1	OMROM	A6DR-4100	
L1	TDK	NL252018T	
XTAL1		16MHz	HC-49/S
XTAL2		6MHz	HC-49/S
R1-16		10k	2012type
R17-20		2k	2012type
R21		2.2k	2012type
R23,24		10	2012type
R25		1.5k	2012type
R26,27		100k	2012type
R28		470	2012type
R29-36		100	2012type

※R26,Cm9欠番