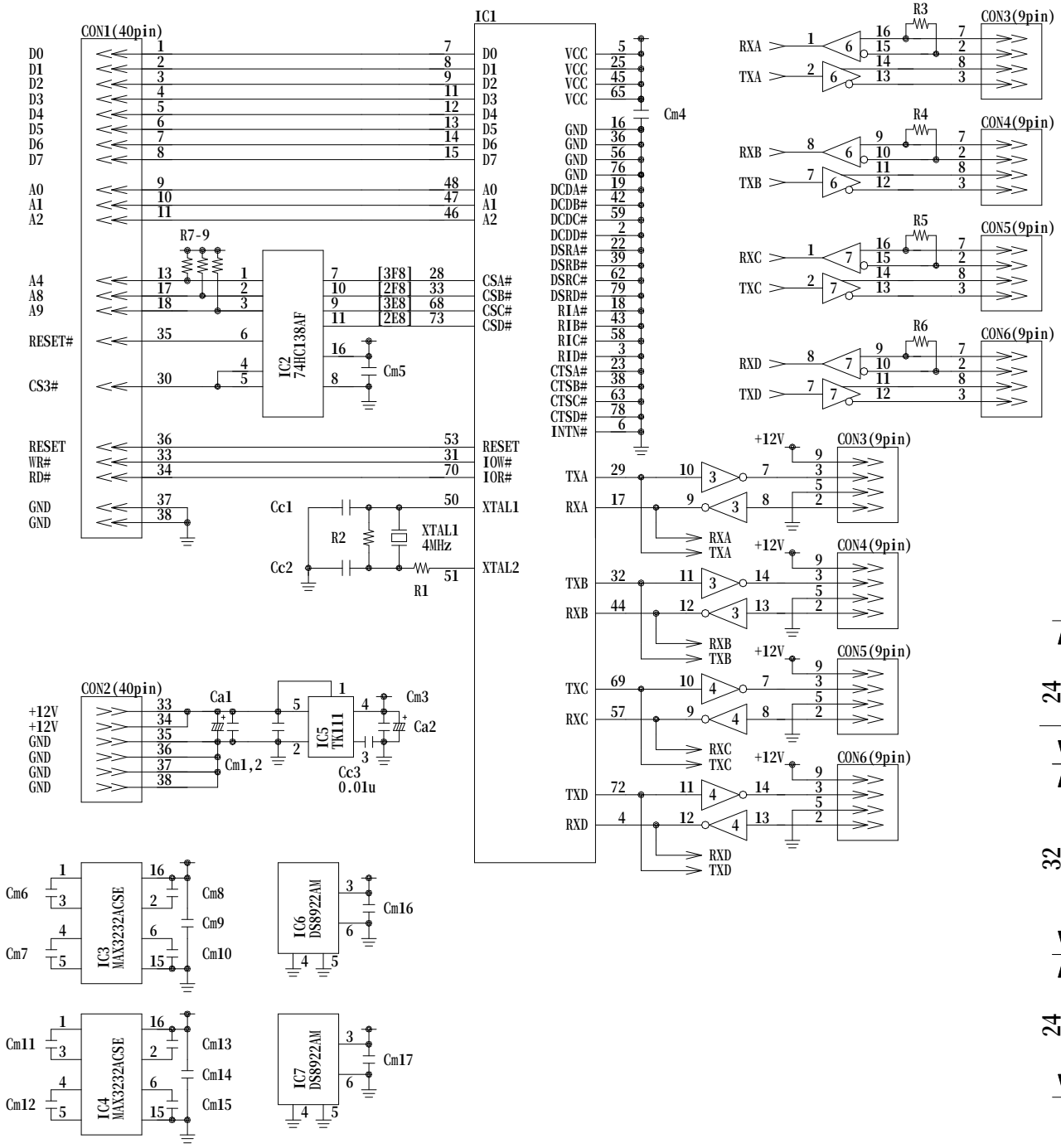
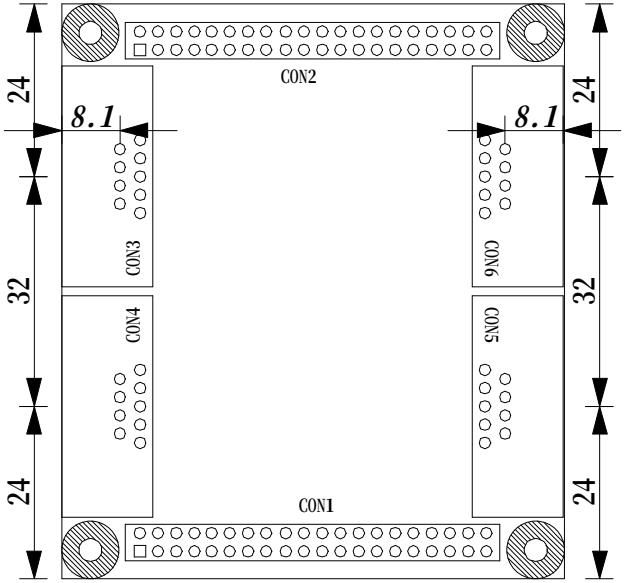
IC1	TI	TL16C554PN	
IC2	MITSUBISHI	74HC138AF	
IC3,4	MAXIM	MAX3232CSE	
IC5	TOKO	TK11150CSCL	
IC6,7		DS8922AM	
XTAL1		4MHz	HC-49/S
CON1,2		LFCN40N-C1184	
CON3-6	JST	JEY-9P-1A3A	
Ca1,2	nichicon	UWT1V101MCR1GS	100u 35V
Cm1-15		0.1u	2012type
Cc1		33p	2012type
Cc2		47p	2012type
Cc3		0.01u	2012type
R1		1.5k	2012type
R2		1M	2012type
R3-6		120	2012type
R7-9		10k	2012type